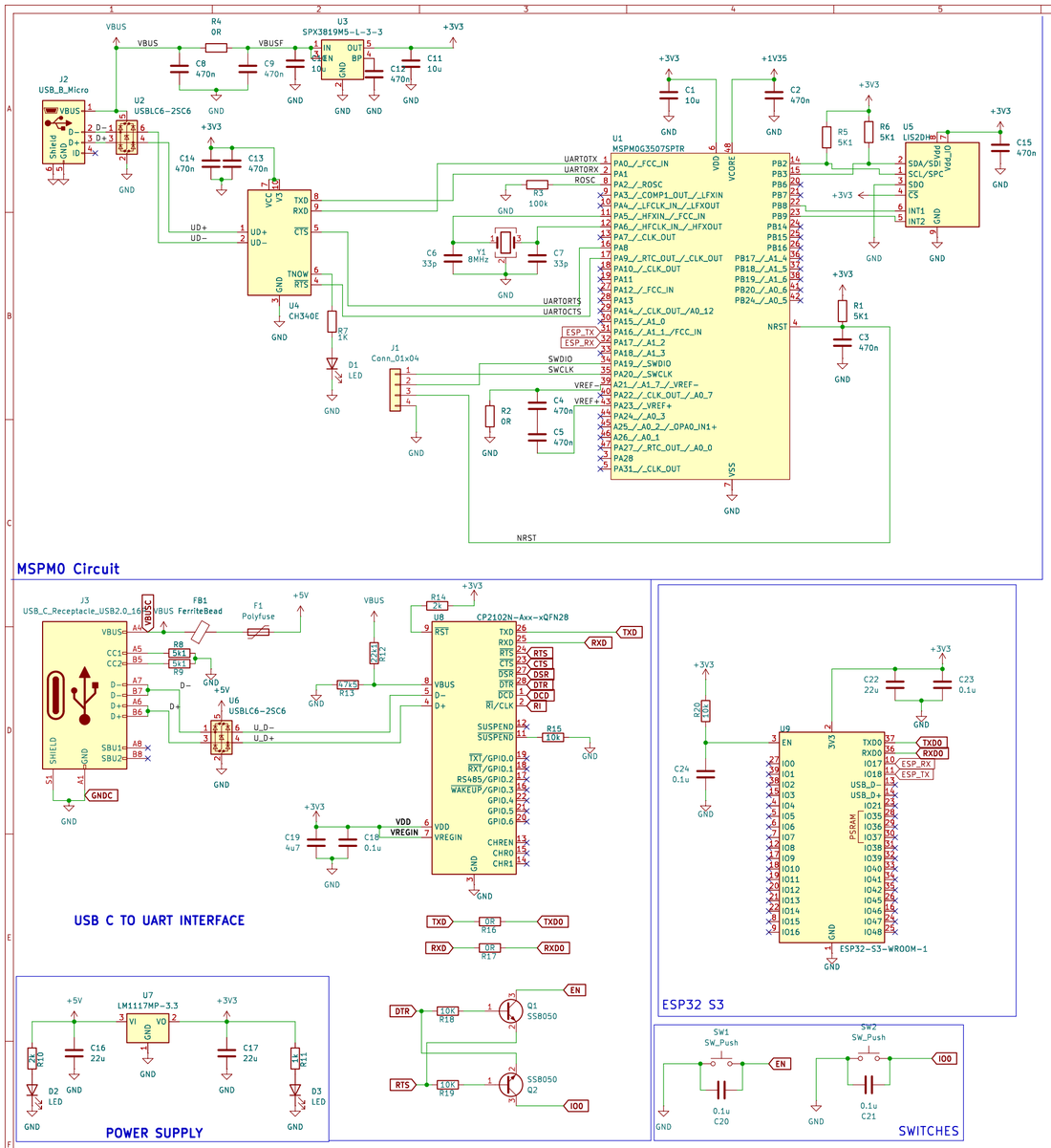

Battery and power Switching Systems

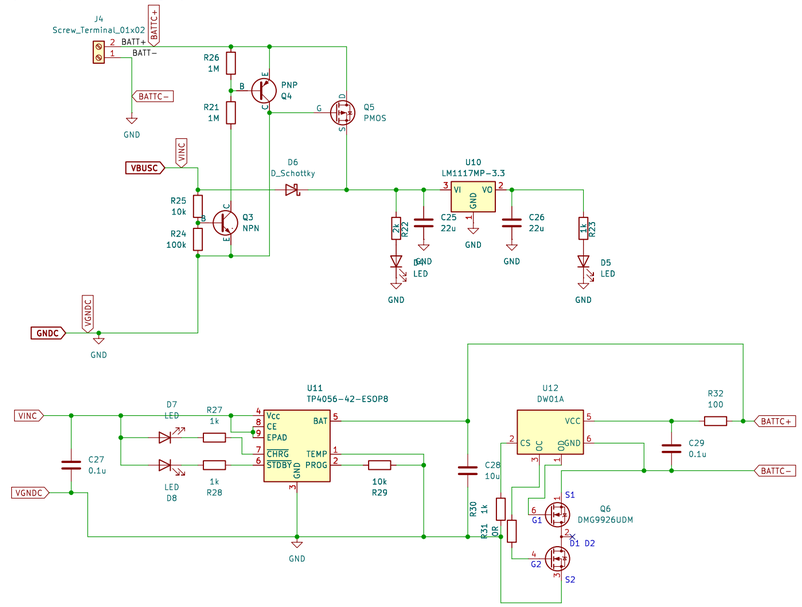

Sheet: /
File: Phil_Lab_Demo.kicad_sch

Title: MCU

Size: A2	Date: 2026-03-23	Rev: V1.2
KiCad E.D.A. 9.0.8		Id: 1/1